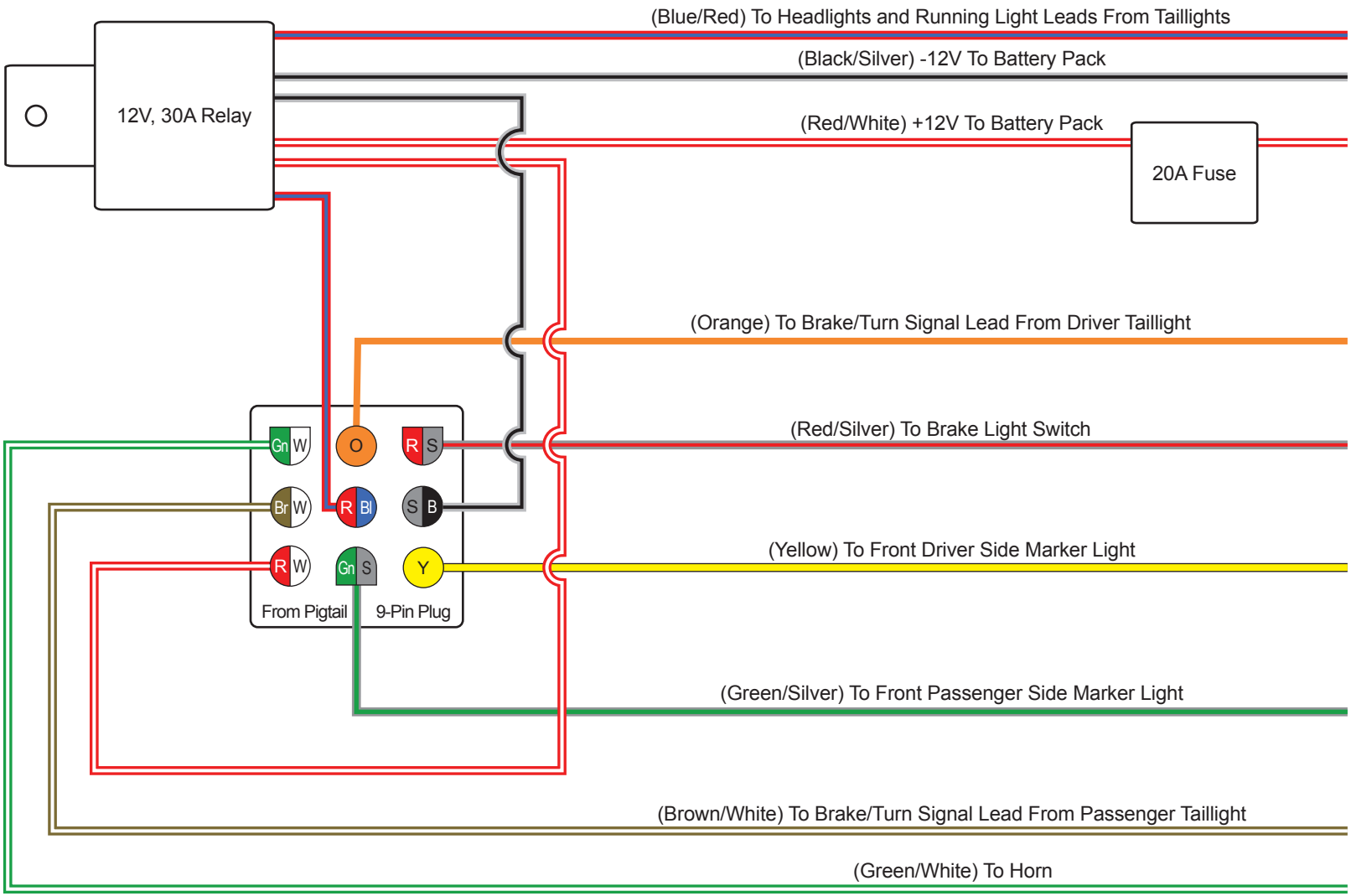LGT-132B Pigtail Harness Wiring Diagram