HARDWARE INCLUDED

All hardware shown to scale.
Fasteners can be identified by number of stripes.

BOLT FASTENER

3.00in

B1
QTY 4

STRIPED SHORT FASTENERS

1.75in

S1
QTY 8

.97in

S2
QTY 4

1.13in

WASHERS*

W1
QTY 4

LOCK NUTS

N1
QTY 4

* Additional washers provided for use as needed in step 2 and step 6

PARTS INCLUDED

D Driver
P Passenger
21D/21P Front Uprights
22D/22P Rear Uprights**
23 Rear Upright Mount Bar
24 Rear Upright Mount
25 Top Center
26 Top Ends
27 Canvas Top

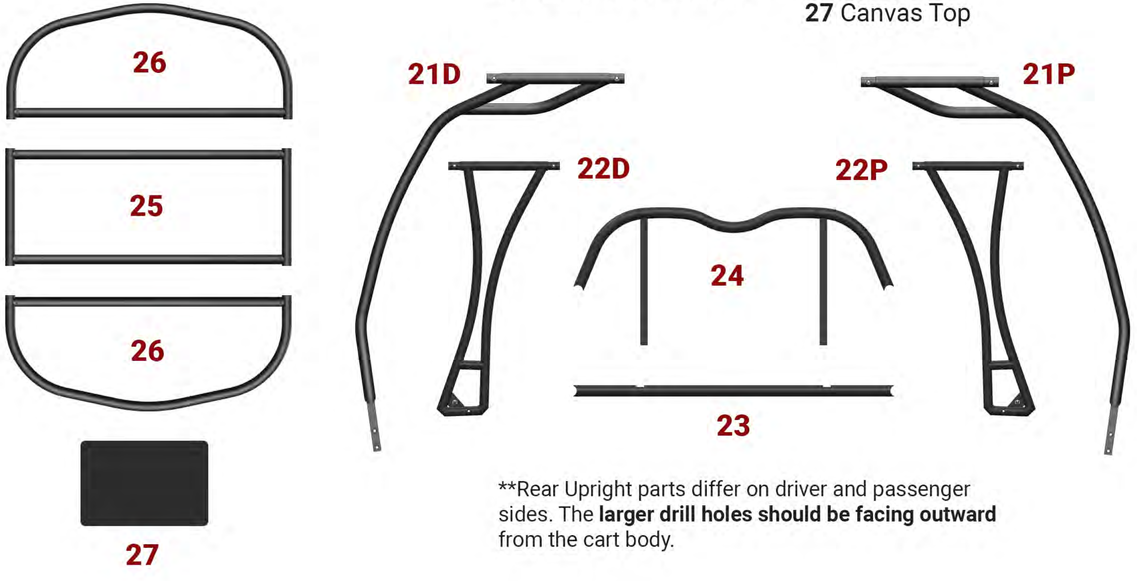

Rear Upright parts differ on driver and passenger sides. The **larger drill holes should be facing outward from the cart body.

WARNING:

Please have installation performed by a professional mechanic. This roof system is not load-bearing. This roof system will not provide protection in the event of a rollover. Do not carry items or persons on top of the roof system. Installation of the roof system will raise the vehicle's center of gravity. Please use extreme caution when encountering driving conditions which may cause vehicle imbalance. It is imperative that the operator and passengers remain seated, keep their arms and legs within the vehicle, and wear a seatbelt. It is the owner's responsibility to caution and warn any potential driver of the vehicle about these driving and handling conditions. Golf Cart King advises that you check your state and local ordinances prior to installing a suspension kit or other aftermarket vehicle modification.

CALIFORNIA PROP 65 WARNING:

WARNING: Operating, servicing and maintaining a passenger vehicle or off-highway motor vehicle can expose you to chemicals including engine exhaust, carbon monoxide, phthalates, and lead, which are known to the State of California to cause cancer and birth defects or other reproductive harm. To minimize exposure, avoid breathing exhaust, do not idle the engine except as necessary, service your vehicle in a well-ventilated area and wear gloves or wash your hands frequently when servicing your vehicle. For more information go to www.P65Warnings.ca.gov/passenger-vehicle.

MODZ

TOWER TOP

INSTALLATION MANUAL

FOR CART MODELS: CLUB CAR PRECEDENT / TEMPO / ONWARD

+ REAR SEAT MODELS: MAX 5 / GEN 250/ GEN 300

#RIDEMODZ

golfcartking **GolfCartKing** **Golf Cart King**

Need assistance?

Tech Support:
844-MODZ-USA

WARNING:

Please have installation performed by a professional mechanic. This roof system is not load-bearing. This roof system will not provide protection in the event of a rollover. Do not carry items or persons on top of the roof system. Installation of the roof system will raise the vehicle's center of gravity. Please use extreme caution when encountering driving conditions which may cause vehicle imbalance. It is imperative that the operator and passengers remain seated, keep their arms and legs within the vehicle, and wear a seatbelt. It is the owner's responsibility to caution and warn any potential driver of the vehicle about these driving and handling conditions. Golf Cart King advises that you check your state and local ordinances prior to installing a suspension kit or other aftermarket vehicle modification.

CALIFORNIA PROP 65 WARNING:

WARNING: Operating, servicing and maintaining a passenger vehicle or off-highway motor vehicle can expose you to chemicals including engine exhaust, carbon monoxide, phthalates, and lead, which are known to the State of California to cause cancer and birth defects or other reproductive harm. To minimize exposure, avoid breathing exhaust, do not idle the engine except as necessary, service your vehicle in a well-ventilated area and wear gloves or wash your hands frequently when servicing your vehicle. For more information go to www.P65Warnings.ca.gov/passenger-vehicle.

ASSEMBLY INSTRUCTIONS

We recommend using Metal Silicone Sealant when installing the Tower Top. Simply apply sealant to male/female connections to reduce overall noise and movement.

1

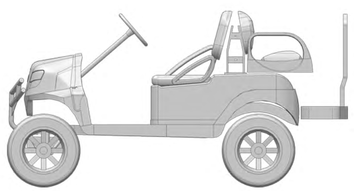

Remove the factory top, uprights, and rear uprights from the cart body and retain the following original hardware on both the driver and passenger side:

- M8 x 1.25 x 60mm Long Button Head Torx Screw. Re-use for Front Uprights. (QTY 4)

2

Loosely assemble **Front Uprights.** **21D/21P**

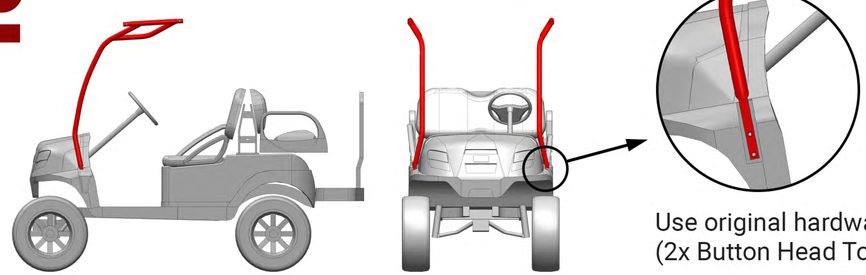

NOTE: Carts with windshields installed may need additional washers between fromt uprights and cart body to adjust width accordingly.

Use original hardware to fasten (2x Button Head Torx Screw).

3

Place **Rear Upright Mount Bar** through the rear seat supports. **23**

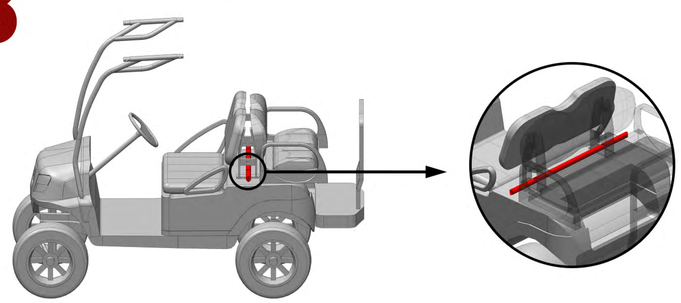

Open slots should be facing up.

4

Insert **Rear Upright Mount** into the Rear Upright Mount Bar open slots and loosely assemble to rear seat supports. **24**

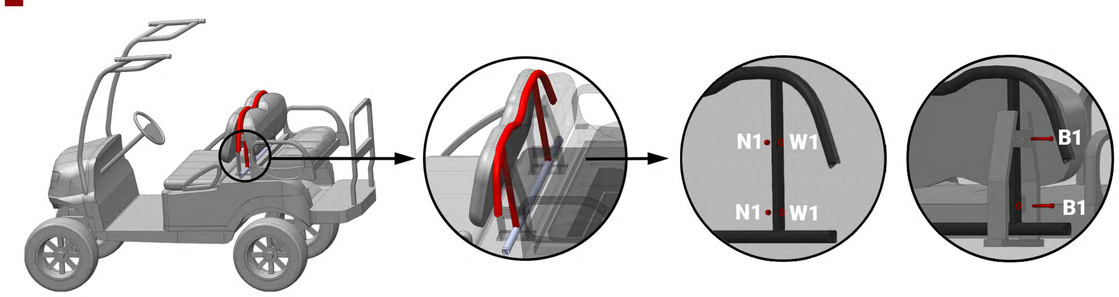

5

Loosely assemble **Rear Uprights** to the Rear Upright Mount and Bar. **22D/22P**

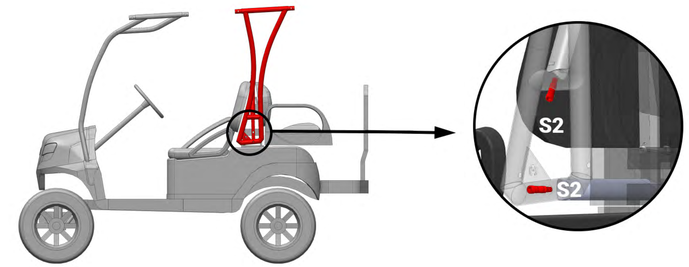

6

Loosely assemble **Top Center** between Front and Rear Uprights. **25**

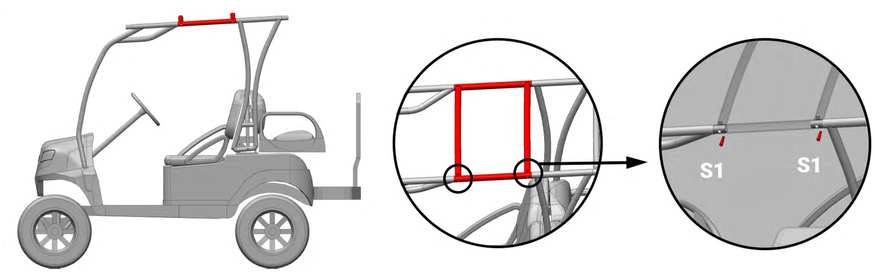

NOTE: Additional washers may need to be installed beneath rear seat supports to ensure seamless top center and upright connections.

7

Loosely assemble **Top Ends** to the Front and Rear Uprights. **26**

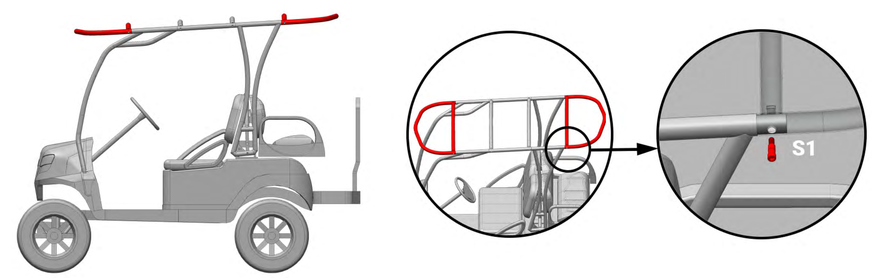

8

With all parts in place, fully tighten all hardware to complete body assembly.

Install **Canvas Top** with the shorter zipper towards the front of the cart and the curved zipper at the back end of the cart. **27**

Do not install additional weight to the Tower Top frame as this will cause additional wear and tear over time.

WARNING:

Please have installation performed by a professional mechanic. This roof system is not load-bearing. This roof system will not provide protection in the event of a rollover. Do not carry items or persons on top of the roof system. Installation of the roof system will raise the vehicle's center of gravity. Please use extreme caution when encountering driving conditions which may cause vehicle imbalance. It is imperative that the operator and passengers remain seated, keep their arms and legs within the vehicle, and wear a seatbelt. It is the owner's responsibility to caution and warn any potential driver of the vehicle about these driving and handling conditions. Golf Cart King advises that you check your state and local ordinances prior to installing a suspension kit or other aftermarket vehicle modification.

CALIFORNIA PROP 65 WARNING:

WARNING: Operating, servicing and maintaining a passenger vehicle or off-highway motor vehicle can expose you to chemicals including engine exhaust, carbon monoxide, phthalates, and lead, which are known to the State of California to cause cancer and birth defects or other reproductive harm. To minimize exposure, avoid breathing exhaust, do not idle the engine except as necessary, service your vehicle in a well-ventilated area and wear gloves or wash your hands frequently when servicing your vehicle. For more information go to www.P65Warnings.ca.gov/passenger-vehicle.